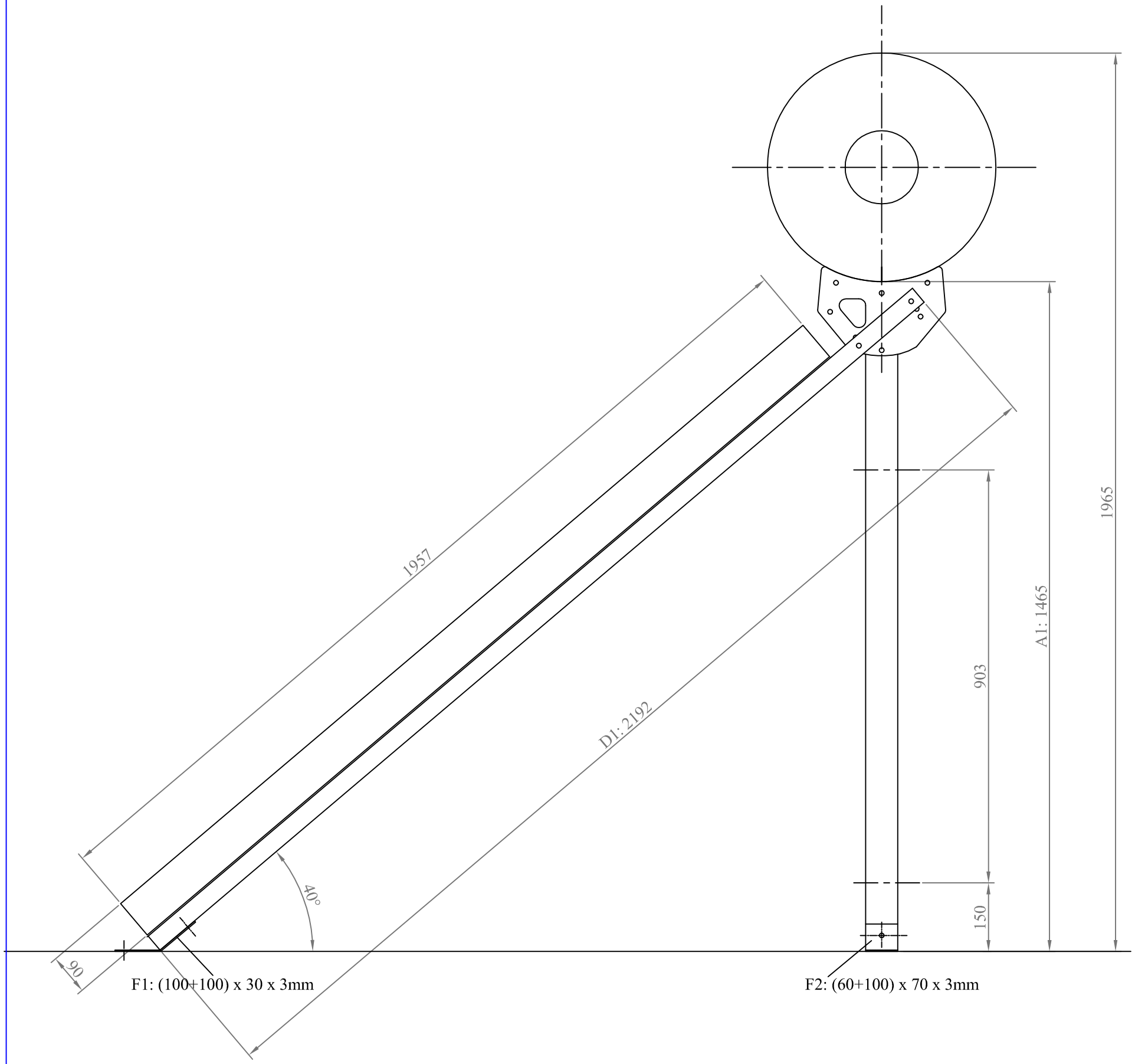

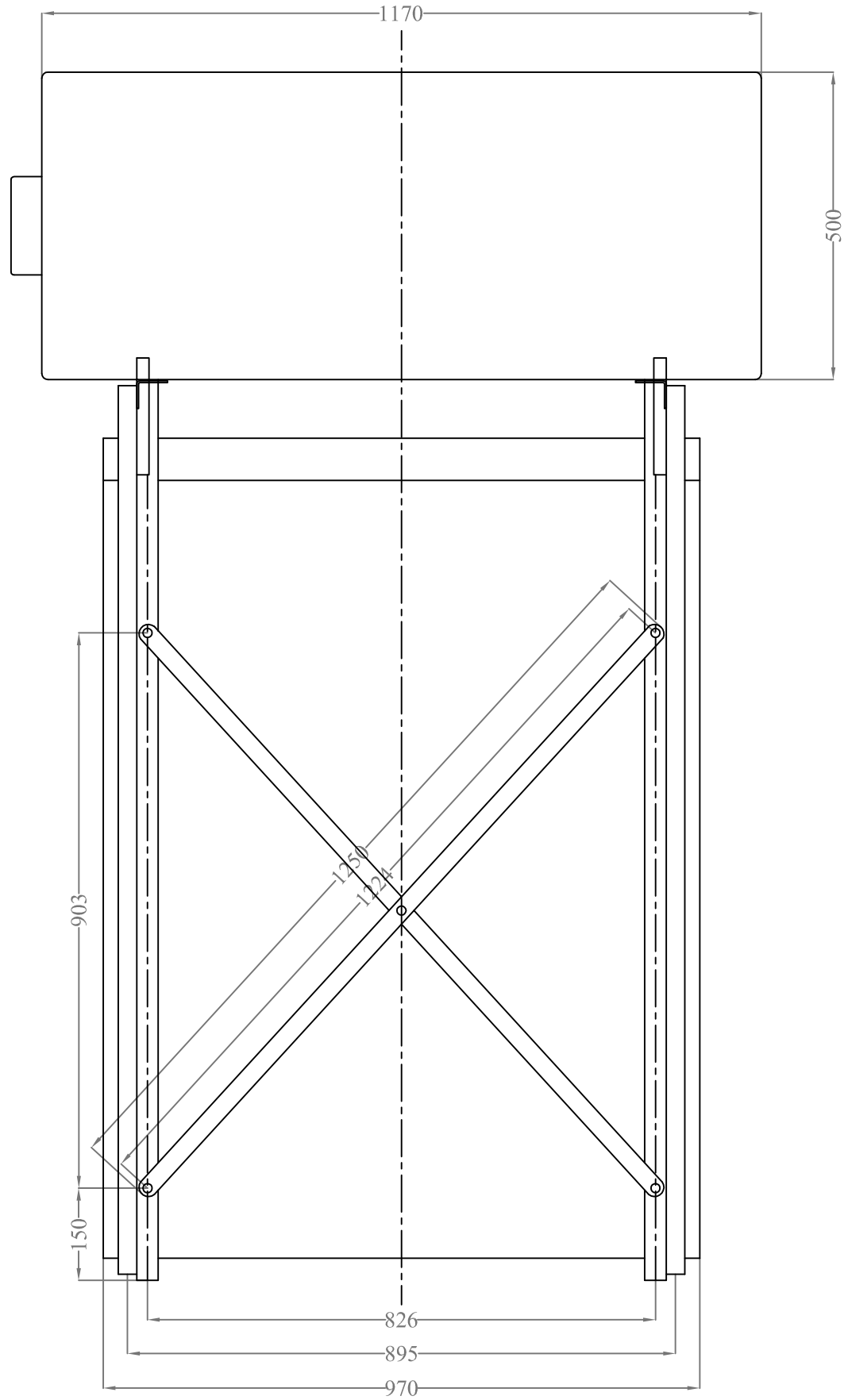

Itemref	Quantity	Title/Name, designation, material, dimension etc			Article No./Reference	
Designed by Tsesmelis Michael		Checked by Panos Lamaris	Approved by - date SOLE S.A. / 20-09-04	Drafted V.D.	Date 01-10-2004	Scale 1:10

SOLE S.A.

ΣΧΕΔΙΟ ΟΨΕΩΝ
ΝΕΑΣ ΒΑΣΗΣ

EURO-150-1-200